PARTS FOR RC10B4 KITS

Use these exploded drawings to find the part number. Then look up its number in the catalog portion on the reverse for part details.

An asterisk (*) next to a number indictates that a Factory Team option is available. See the **Factory Team** section for details.

"**RTR:**" before the part number indicates inclusion in RTR box.
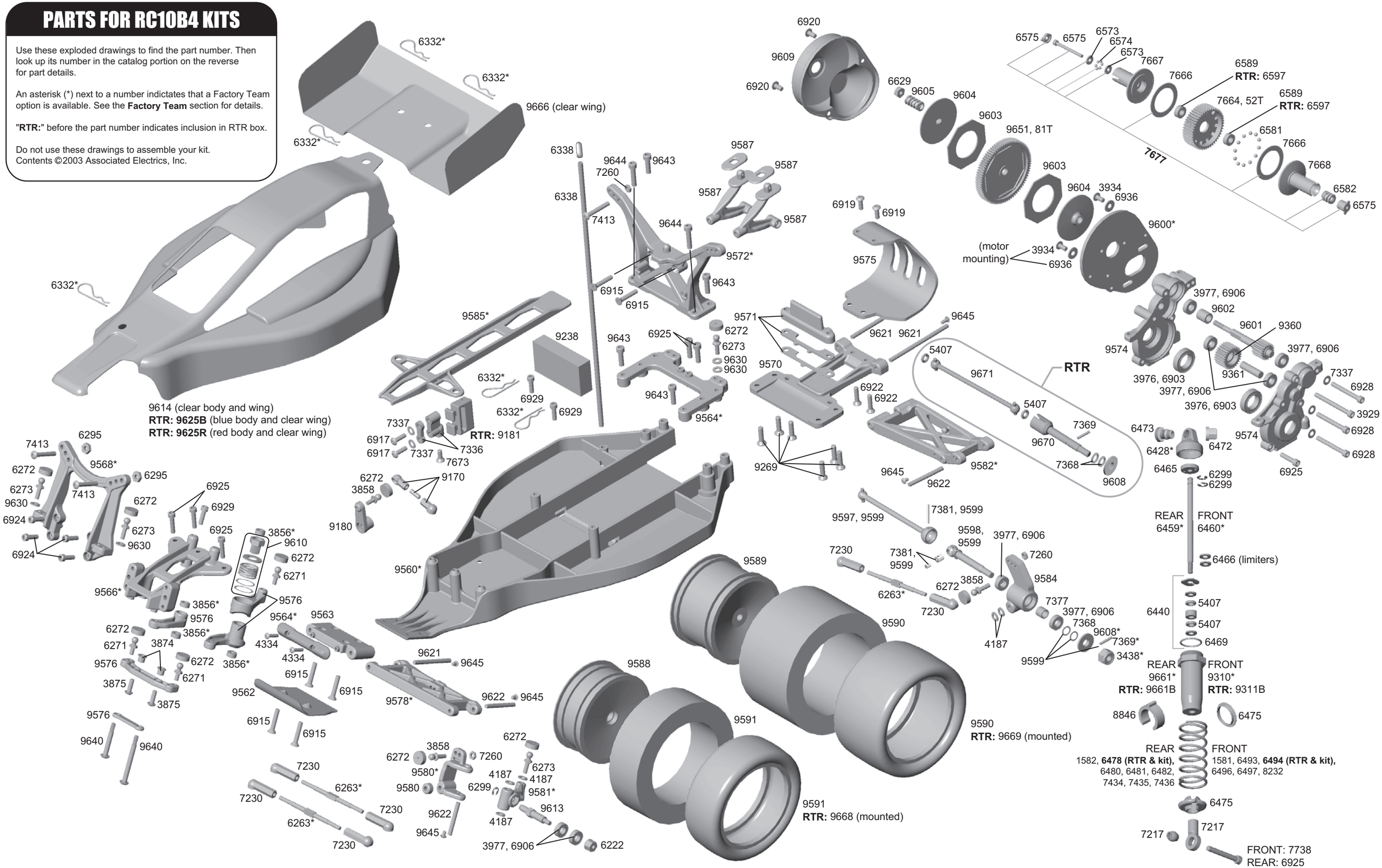
Do not use these drawings to assemble your kit.
Contents ©2003 Associated Electrics, Inc.